1-B6782-170

Retractable Cable, Coiled, Length 30m

General

Retractable cables are designed to provide electrical connection for parts that are in motion after connection e.g. a tank roof top of floating roof tanks. They reduce the risk present in normal cables of being caught and snapped during the rising and falling movement of the tank roof.

The 1-B6782-170 is a coiled, retractable, 4-core cable of 30m in working length.

Accessories

For ease of installation, retracable cables may be used with an optional retractable cable collector, the 1-B6782-032.



Details

- Symplifies electrical connections of floating roof tanks
- Reduces cable damage in moving installations

1-B6782-170

Retractable Cable, Coiled, Length 30m

Technical specifications

Electrical

No. of cable cores	4

Conductor

Core colours	blue, brown, black, yellow
Diameter	1.75 mm
Insulation	PVC
Sheath	Polyurethane

Physical

Physical dimensions	0.75 mm²
Colour	Black

Environmental

Operating temperature	-40 to +80°C
Environment	Indoor, Outdoor

Cable

Diameter	10 mm (± 0.25)
Sheath	Hytrel™ (Dupont)
Tails D/E*	1.5 m (± 50) 5.5m (± 100)
Working length (incl. tails)	30 m

Coil

Outer diameter (nom.) A*	250 mm
Closed length B*	580 mm (± 50)

Manufacturing standards

Cores	ISO 6722 Thin Wall

*

(See image below)

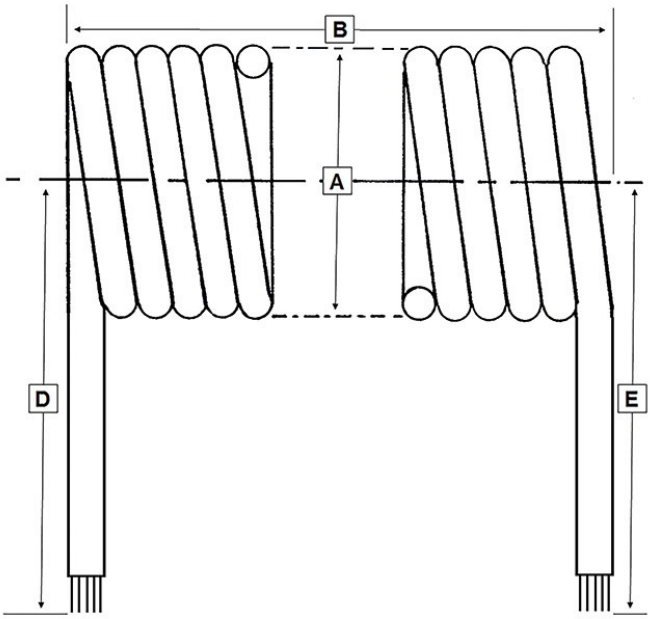

KIDDE GLOBAL SOLUTIONS

As a company of innovation, Kidde Global Solutions reserves the right to change product specifications without notice. For the latest product specifications, visit firesecurityproducts.com online or contact your sales representative.

Last updated on 30 July 2026 - 10:56