TVP-CMB-02

TruVision PTZ Corner Mount bracket

General

The TruVision TVP-CMB-02 corner mount bracket can be used to install IP PTZ cameras on the outside corner of a wall.



Details

- Corner mount bracket for PTZ cameras
- Compatible with PTZ wall mount bracket TVP-WMB-01

TVP-CMB-02

TruVision PTZ Corner Mount bracket

Technical specifications

General

Bracket type	Camera
Support type	PTZ camera
Bracket mounting part	Mounting bracket
Mount type	Corner mount

Physical

Physical dimensions	180 x 105 x 250 mm
Net weight	2.3 kg
Colour	Grey
Material	Stainless steel

Environmental

Environment	Indoor, Outdoor

Compatible products

Category	Reference	Description
Brackets & Mounts	TVP-WMB-01	TruVision PTZ Wall Mount bracket

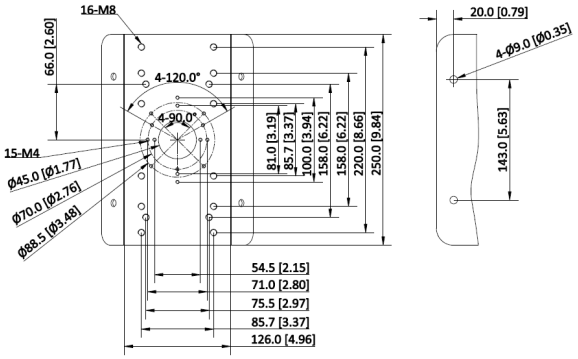

Unit: mm [inch]

SCALE 1:1

As a company of innovation, Kidde Global Solutions reserves the right to change product specifications without notice. For the latest product specifications, visit firesecurityproducts.com online or contact your sales representative.

Last updated on 24 August 2026 - 15:23