EST-S136

Altifalante de incêndio de teto completo e compacto de 13cm de diâmetro. Potência 6W, 100V.

Vista Geral

Ceiling-mounted fire alarm loudspeakers EST-S106 and EST-S136 are designed for applications which require the minimum size at the maximum sound quality. Their parameters have been carefully selected to match the operating requirements in the rooms exposed to after-sound and high-humidity.

Thanks to the most advanced technologies the EST-S series loudspeakers combine excellent acoustic parameters and high aesthetics with resistance to mechanical damages and varying weather conditions. They are distinguished by easy and quick installation.

Quality standards and audio characteristics have been confirmed through multiple tests and trials employing such facilities as e.g. echo-proof chamber, resistance and integrity testing equipment, as well as chambers for resistance to weather and air humidity testing.

The need to maintain the best acoustic parameters, even with easily installed fire-protecting screens, was the idea underlying the design process. The EST-S series loudspeakers ensure a balanced sound which is extremely important in emission of highly understandable speech and reliable music reproduction.

The series of ceiling-mounted EST-S loudspeakers is noticeable thanks to its elegant looks. The loudspeaker part which becomes visible after the installation is protected by means of electroplating and covered by a common and aesthetic white paint coat (RAL 9003) – optionally available other colours (RAL palette).

The entire EST-S series is equipped with a standardized fire dome made of soft steel and supplied with two cable penetrations with rubber glands. Special jig for sling assembling facilitates quick installation.

The delivery comprises the 1 m long sling. Two ceramic blocks and fireproof wiring coupled with temperature limit fuse are located under the screen. This solution ensures 100% protection of the sound-transmitting line from any break or short-circuits which may be produced as a result of loudspeaker burn.

The EST-S loudspeakers have been successfully tested by means of the most rigorous trials at the temperature of 822°C. The individual power rating is selected by means of connection with applicable transformer branch.

EST-S series loudspeakers equipped with fire dome and thermal protections entirely comply with EN 54-24 Standards. In order to ensure 100% consistency with the highest quality standards, we test our loudspeakers following the most meticulous procedures that

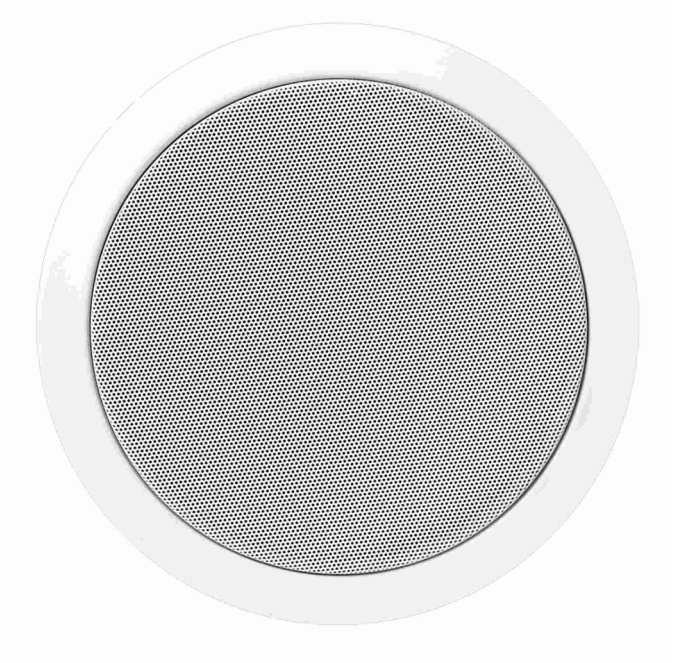

Detalhes

- Conformidade com a EN 54-24
- Certificado de Conformidade: 1438-CPR-XXXX
- Dimensões reduzidas
- Ambiente de operação A e C, ideal para casas de banho
- O mais alto nível de compreensão da comunicação verbal
- Design elegante
- Transformador de 6 W, permite uma selecção precisa da potência de saída dos altifalantes
- 100% de protecção da linha contra quebras e curto-circuitos à temperatura de 822°C

warrant high parameters of sound emission, safety, and reliability.

In spite of the fact our loudspeakers are designed for the highest reliability under fire conditions, their acoustic parameters and attractive low prices make them successful in any and all public address systems.

EST-S136

Altifalante de incêndio de teto completo e compacto de 13cm de diâmetro. Potência 6W, 100V.

Especificações técnicas

Physical

Physical dimensions	134 x 113 mm (Ø x H)
Net weight	0.82 kg
Colour	White (RAL 9003)
Mounting type	Spring clamp
Mounting position	Ceiling
Housing material	Steel

Environmental

IP rating	32

Regulatory

Standards	EN54-24

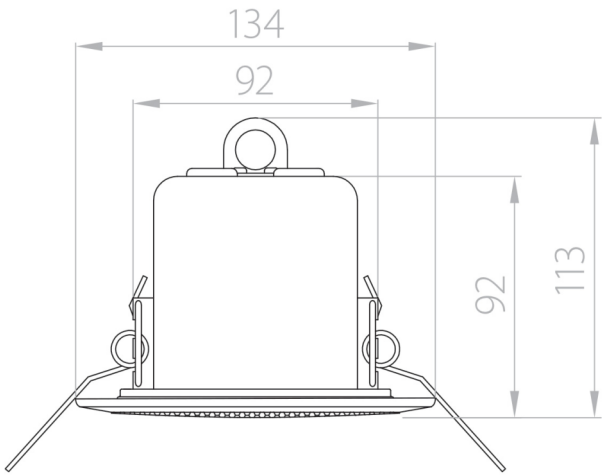

EDWARDS
Built for Resilience

Como empresa de inovação, a Kidde Global Solutions reserva o direito de alterar as especificações do produto sem aviso prévio. Para obter informações sobre as especificações mais recentes do produto, visite pt.firesecurityproducts.com online ou contate o departamento comercial.

Last updated on 12 November 2026 - 18:57