NC-DPH-W

Conventional heat detector (white)

General

The NC-DPH-W is a configurable conventional rate-of- rise or fixed temperature heat detector.

Application

The detector supports installation on the NC-DB-W conventional detector base for standard applications, or the NC-DBD-W diode base when head-out functionality to BS5839 standard is required. Detection sensitivities are programmable using the NC-D-PT device programmer.



Details

- Self-diagnostic
- Local test activation with reed switch
- All round LED visibility (360° viewing angle) avoids time spent on specific detector orientation
- Configurable polling LED support
- Remote indicator output
- 3 Programmable operating levels (A1R, A2S and BS)

NC-DPH-W
Conventional heat detector (white)

Technical specifications

General

Status indication	Red LED
User interface	Via LED - polling, fault, contamination and alarm
Compatibility	GST100A Series conventional CIEs as well as GST I-9319 Zone Monitor
Reset voltage	< 1 VDC
Reset time	<10 s
Alarm levels	3
Connectivity	Zone connection - 2-core (polarity sensitive), RI connection - 2-core (polarity sensitive)

Electrical

Operating voltage	9.5 to 28 VDC (24 VDC typical)
Current consumption	<60 µA (Quiescent) ≤55 mA (Alarm)
Cable specification	>1.0 mm²
No. of cable cores	2
Terminals	4

Detection

Detection principle	Heat
Sensitivity	Programmable
Zone length	Panel dependent

Output

Remote alarm output	1

Physical

Physical dimensions	54.5 mm (including base) x 100 mm Ø
Net weight	±110 g
Colour	Bianco (RAL 9016)
Mounting type	Loftmontering
Material (body)	ABS

Environmental

Vandal proof	No
Operating temperature	-10 to +65°C
Relative humidity	0 to 95% noncondensing
Environment	Indendør
IP rating	IP2x

Regulatory

Compliancy	CE, WEEE
Certification	EN54-5
Voluntary marks	BOSEC
Standards	LPCB

Compatible products

Category	Reference	Description
Detection device	NC-D-PT	Conventional hand held device programmer
Detection device	NC-DB-W	Conventional standard point detector base (White)
Detection device	NC-DB2R-W	Conventional dual relay base (White)
Detection device	NC-DBD-W	Conventional standard point detector base with diode (White)
Detection device	NC-DBR-W	Conventional relay base (White)
Notification device	PA25/3L	Conventional remote indicator

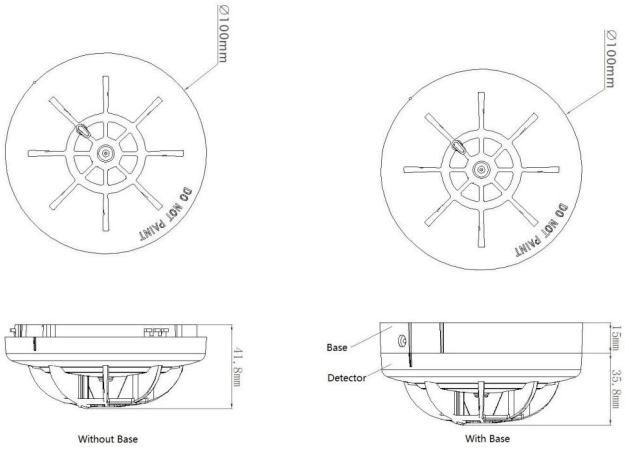

KIDDE COMMERCIAL

As a company of innovation, Kidde Global Solutions reserves the right to change product specifications without notice. For the latest product specifications, visit firesecurityproducts.com online or contact your sales representative.

Last updated on 1 October 2026 - 13:15